V1 Solenoid Valve

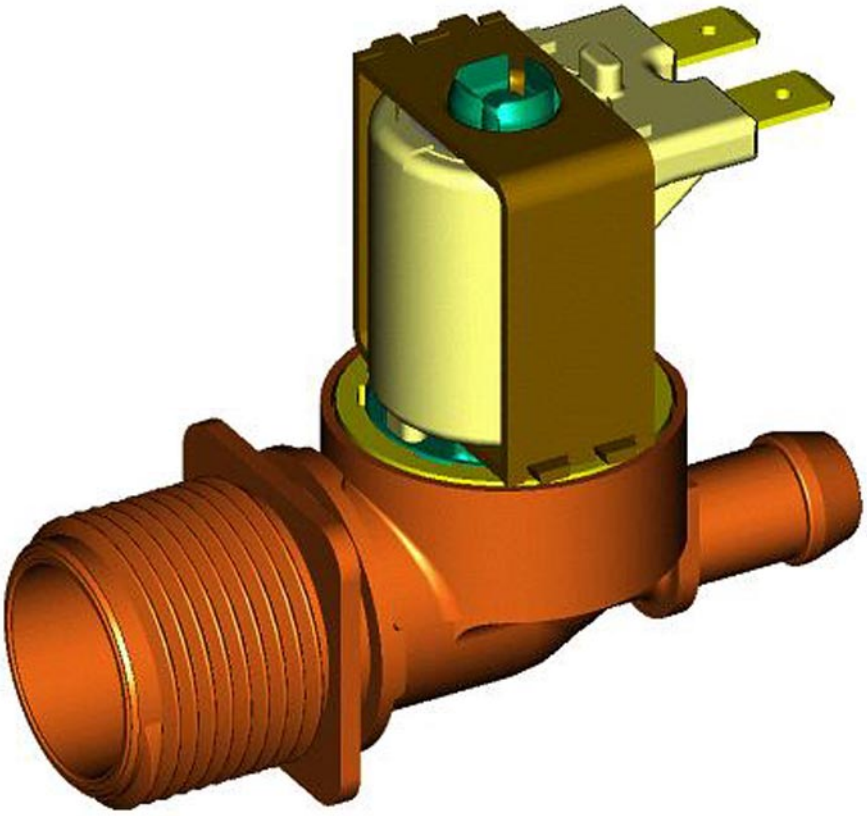

THE V18 SERIES SOLENOID VALVE

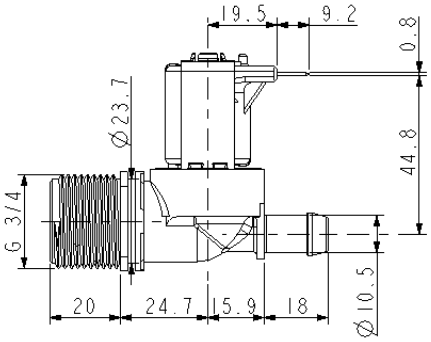

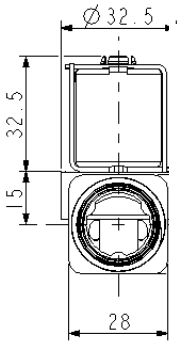

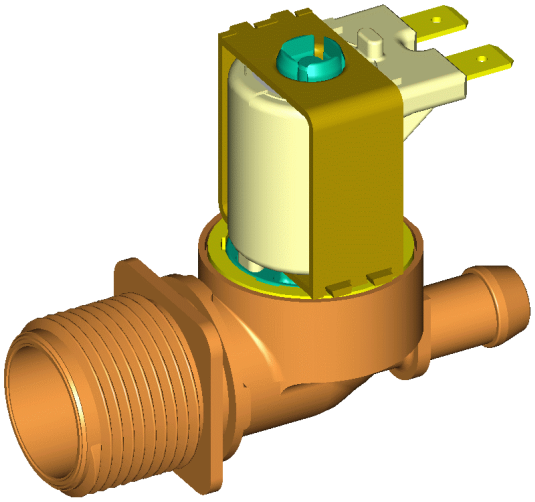

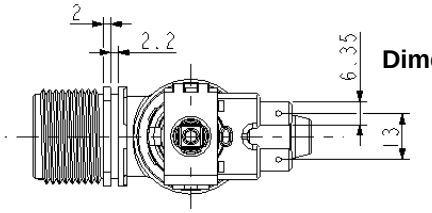

Dimensions in millimetres

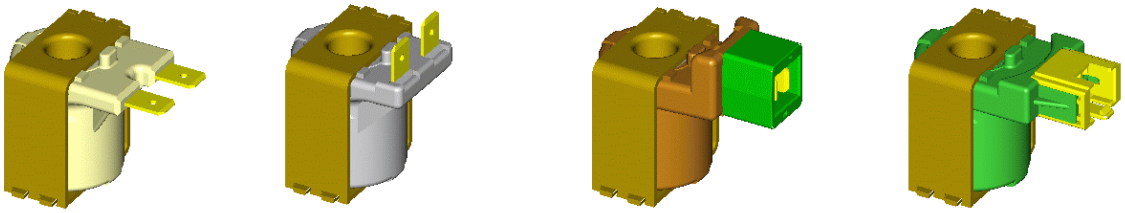

Part of an extensive line of pilot operated solenoid valves for use in clothes washers, dishwashers, showers, air conditioning systems and other domestic or commercial applications.

Fully flexible and designed and produced to meet the stringent requirements of the markets of today and the future.

Rated Voltage :	**220-240 vac, 110-120 vac, 24 vac & 12 vac. Others upon request.**
Rated Frequency :	**50-60 Hz**
Power Draw :	**6 Watts. (3 Watt DC servo-assisted - optional) at 230vac**
Coil Insulation :	**Class F (140°C Operating Temperature)**
Ambient Temperature :	**60 °C maximum.**
Liquid Temperature :	**90°C maximum.**
Operating Cycle Rate :	**Tu 25°C, Tm 90°C & Tu 60°C, Tm 25°C - Continuous (100% ED)**
	Tu 60°C, Tm 90°C - 3minutes ON, 5 minutes OFF
Operating Pressure Range :	**0.2 to 10 bar**
Flow Regulator (Optional) :	**0.25 to 17 Litres/minute**
EMC :	**Fully compliant**
Approvals :	**Approved by all Major Approvals Agencies World-wide.**
	EN 60 730-2-8, UL 429, CSA C22.2 etc.
Insulation :	**Class II. Fully double insulated. No grounding required.**
Terminals :	**Two 6.35 x 0.8 mm male tab terminals. RAST 5 and RAST 2.5 Optional.**

The information, data and parameters given in this document are subject to change without notice

THE V19... SERIES SOLENOID VALVE

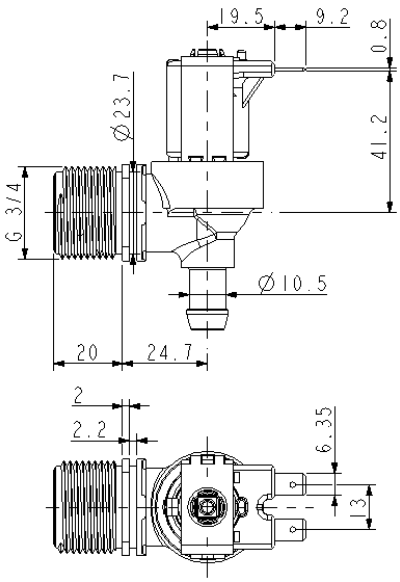

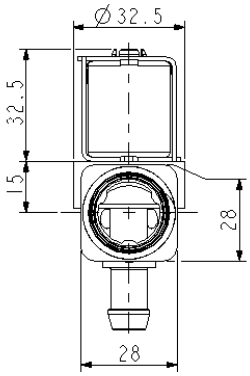

Dimensions in millimetres

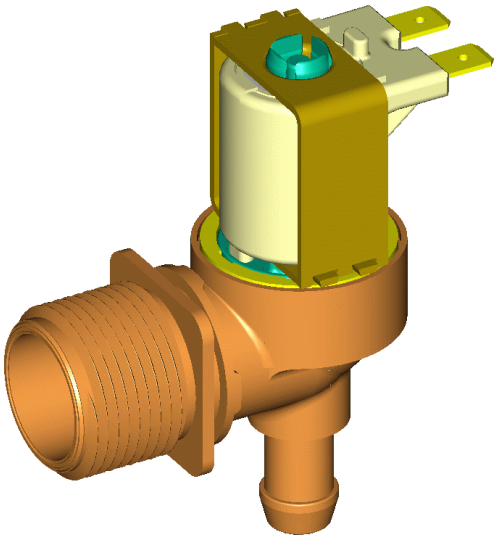

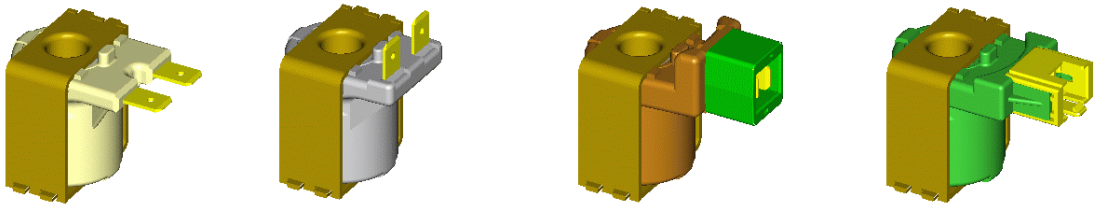

Part of an extensive line of pilot operated solenoid valves for use in clothes washers, dishwashers, showers, air conditioning systems and other domestic or commercial applications.

Fully flexible and designed and produced to meet the stringent requirements of the markets of today and the future.

Rated Voltage :	**220-240 vac, 110-120 vac, 24 vac & 12 vac. Others upon request.**
Rated Frequency :	**50-60 Hz**
Power Draw :	**6 Watts. (3 Watt servo-assisted - optional) at 230vac**
Coil Insulation :	**Class F (140°C Operating Temperature)**
Ambient Temperature :	**60 °C maximum.**
Liquid Temperature :	**90°C maximum.**
Operating Cycle Rate :	**Tu 25°C, Tm 90°C & Tu60°C, Tm 25°C - Continuous (100% ED)**
	Tu 60°C, Tm 90°C - 3minutes ON, 5 minutes OFF
Operating Pressure Range :	**0.2 to 10 bar**
Flow Regulator (Optional) :	**0.25 to 17 Litres/minute**
EMC :	**Fully compliant**
Approvals :	**Approved by all Major Approvals Agencies World-wide.**
	EN 60 730-2-8, UL 429, CSA C22.2 etc.
Insulation :	**Class II. Fully double insulated. No grounding required.**
Terminals :	**Two 6.35 x 0.8 mm male tab terminals. RAST 5 and RAST 2.5 Optional.**

The information, data and parameters given in this document are subject to change without notice

DISCLAIMER
This manual and its contents remain the sole property of Invensys, and shall not be reproduced or distributed without authorization. Although great care has been exercised in the preparation of this document, Invensys, its employees or its vendors, cannot accept any liability whatsoever connected with its use. Invensys reserves the right to make any changes or improvements without prior notice.

Invensys Appliance and Climate Control Systems Europe

HEADQUARTERS

Europa 3 - Parc d'Affaires International
74160 Archamps
FRANCE
tel. 0033.450.820.813
fax. 0033.450.820.831

PRODUCTION PLANT

Invensys Monaco
5, Rue du Gabian
98000 Monaco
MONACO
tel.
fax.

http:\\www.appliance-eu.invensys.com

release 05/2002