invensys Controls

THE V48 SERIES SOLENOID VALVE

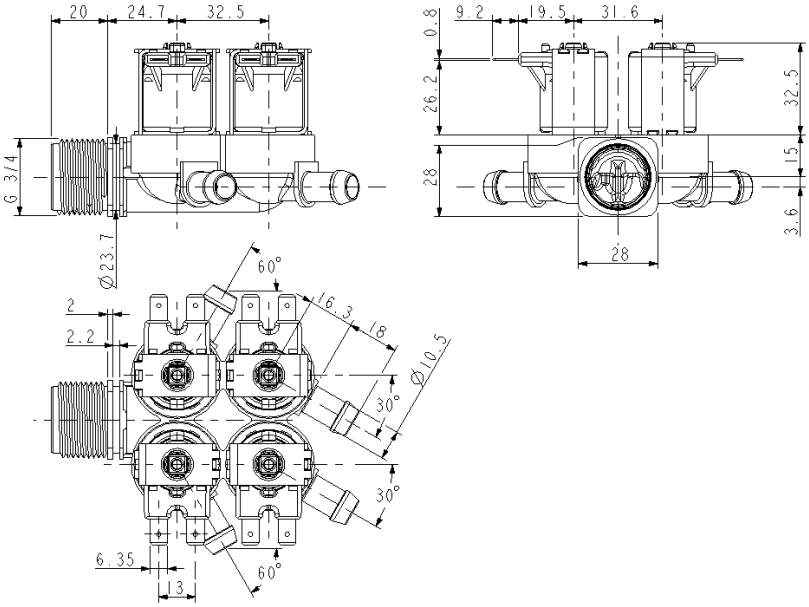

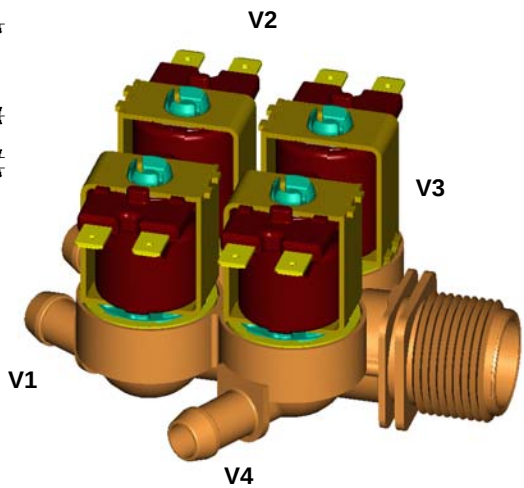

Part of an extensive line of pilot operated solenoid valves for use in clothes washers, dishwashers, showers, air conditioning systems and other domestic or commercial applications.

Fully flexible and designed and produced to meet the stringent requirements of the market of today and the future.

Rated voltage:	**220-240V 50-60Hz, 110-120V 50-60Hz**
	12VAC & VDC; 24VAC & VDC
Power draw:	**6 watt at 230V**
Coil insulation:	**Class F (140°C wire operating temperature)**
Ambient temperature:	**85°C maximum according water temperature & duty cycle**
Water temperature:	**90°C maximum according water temperature & duty cycle**
Operating duty cycle:	**Tu 25°C, Tm 90°C & Tu 60°C, Tm 25°C, continuous (100%ED)**
(220-240V)	**Tu 25°C, Tm 90°C, 3 minutes ON, 5 minutes OFF**
Operating pressure range:	**0.2 to 10 bar**
Flow regulator (optional):	**0.25 to 17 litre/minute**
Fluid	**Drinking water**
Insulation:	**Class II to water. No grounding required**
Coil terminals:	**Two 6.35x0.8mm male tabs terminals, RAST5 or RAST2.5**
Possible approvals:	**Upon request**
Internal leakage	**Maximum 1 drop/minute on pressure range 0.2 to 10 bar**

The information, data and parameters given in this document are subject to change without notice

invensys
Controls

V48 VALVE DEFINITION FORM

Coil Voltage rating

220-240VAC (standard) ☐
220-240VAC (reinforced) ☐
110-120VAC ☐
380 VAC ☐
24VAC ☐
12VAC ☐
24VDC ☐
12VDC ☐
12VAC/DC servo-assisted (3WDC) ☐

Coil inversed ☐

Terminal Orientation

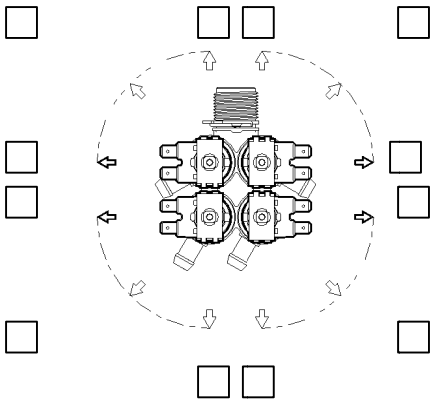

Coil Type

STANDARD ☐

90° ☐

RAST 5 ☐

RAST 2,5 ☐

Bracket orientation

☐

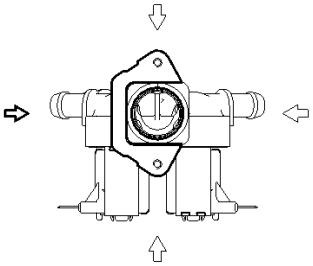

☐ ☐

☐

No bracket ☐

Outlet type

13mm ☐ 10mm ☐

The information, data and parameters given in this document are subject to change without notice

invensys
Controls

V48 VALVE DEFINITION FORM

Conditions of use

Please fill the fields below.

Appliance on witch the valve will be used:
Ambient temperature: normally expected: °C, maximum °C
Water temperature: normally expected: °C, maximum °C
Duty cycle:
Number of daily operations:
Expected life time:
Fluid: has to be water, clean and without chemical agent.
Flow rate:
Flow rate is an instantaneous value, measured after 60 seconds of stabilization.
The flow is regulated on the pressure range from 1 to 10 bar.
V48 valve is available with the following flow regulators.

Inlet flow regulator

FLOW Litre/min	Tolerance	
2,5	15%	
3	15%	
3.5	15%	
3.75	15%	
4	15%	
5	15%	
5.5	15%	
6	15%	
6.5	15%	
8	15%	
9	15%	
10	15%	
11	15%	
12	15%	
14.5	15%	
15	15%	
17	25%	

Thick regulator required

Outlet flow regulator

FLOW Litre/min	Tolerance	V1	V2	V3	V4
0.25	+/-0.1				
0.35	+/-0.1				
0.50	+/-0.15				
0.65	+/-0.25				
0.80	+/-25%				
1.2	+/-25%				
1.3	+/-25%				
2	+/-25%				
2.5	+/-20%				
3.3	+/-20%				
3.8	+/-20%				
5	+/-15%				

If no flow regulator is used, the appliance must warranty that the flow rate will never be higher than 20 litre/minute.

The information, data and parameters given in this document are subject to change without notice

invensys
Controls

V48 VALVE DEFINITION FORM

Agencies Approval

Please indicate us the agencies approval required.

ENEC/VDE according EN60730-2-8 ☐

(Possible for 220-240V 110-120V 12VDC and 24VDC version)

NSF according NSF Standard 169 ☐

(V48 W model)

WRAS ☐

KTW W270 ☐

(Component of water valve in contact with water complies with KTW and W270, the TZW nor DvGW cannot certify water valve component on its own right; only final equipment can be certified to TZW and DvGW requirements. Invensys will, on demand, communicate to these agencies the list of material used)

ACS ☐

CUSTOMER NAME	
ESTIMATED ANNUAL QUANTITIES	
PRODUCTION START DATE	
ADDRESS	
NUMBER of SAMPLES REQUIRED	
REMARKS and REQUIREMENTS	

The information, data and parameters given in this document are subject to change without notice