invensys
Controls

# THE VAI SERIES SOLENOID VALVE

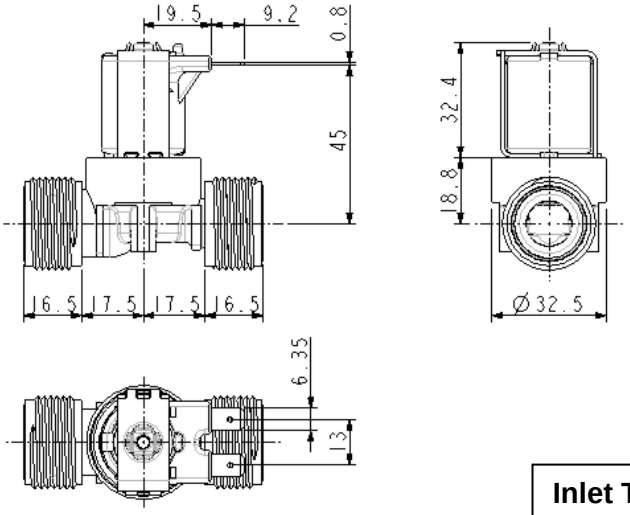


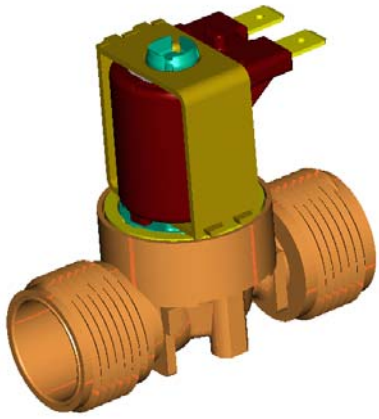

**Inlet Thread :3/4 BSP, 3/8 BSP or 1/2 BSP**
**Outlet Thread :3/4 BSP, 3/8 BSP or 1/2 BSP**
**Any combination of the inlet to outlet thread available**

**Part of an extensive line of pilot operated solenoid valves for use in clothes washers, dishwashers, showers, air conditioning systems and other domestic or commercial applications.**

**Fully flexible and designed and produced to meet the stringent requirements of the market of today and the future.**

| | |
|---|---|
| **Rated voltage:** | **220-240V 50-60Hz, 110-120V 50-60Hz** |
| | **12VAC & VDC; 24VAC & VDC** |
| **Power draw:** | **6 watt at 230V** |
| **Coil insulation:** | **Class F (140°C wire operating temperature)** |
| **Ambient temperature:** | **85°C maximum according water temperature & duty cycle** |
| **Water temperature:** | **90°C maximum according water temperature & duty cycle** |
| **Operating duty cycle:** | **Tu 25°C, Tm 90°C & Tu 60°C, Tm 25°C, continuous (100%ED)** |
| **(220-240V)** | **Tu 25°C, Tm 90°C, 3 minutes ON, 5 minutes OFF** |
| **Operating pressure range:** | **0.2 to 10 bar** |
| **Flow regulator (optional):** | **2.5 to 17 litre/minute** |
| **Fluid** | **Drinking water** |
| **Insulation:** | **Class II to water. No grounding required** |
| **Coil terminals:** | **Two 6.35x0.8mm male tabs terminals, RAST5 or RAST2.5** |
| **Possible approvals:** | **Upon request** |
| **Internal leakage** | **Maximum 1 drop/minute on pressure range 0.2 to 10 bar** |

The information, data and parameters given in this document are subject to change without notice

invensys
Controls

# VAI VALVE DEFINITION FORM

## Coil Voltage rating

220-240VAC (standard) ☐
220-240VAC (reinforced) ☐
110-120VAC ☐
380 VAC ☐
24VAC ☐
12VAC ☐
24VDC ☐
12VDC ☐
12VAC/DC servo-assisted (3WDC) ☐

Coil inversed ☐

## Terminal Orientation

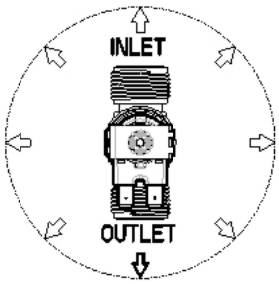


## Coil Type

**STANDARD** ☐

**90°** ☐

**RAST 5** ☐

**RAST 2,5** ☐

## Inlet type

**3/4” BSP** ☐

**3/8” BSP** ☐

**1/2” BSP** ☐

## Outlet type

**3/4” BSP** ☐

**3/8” BSP** ☐

**1/2” BSP** ☐

The information, data and parameters given in this document are subject to change without notice

invensys
Controls

# VAI VALVE DEFINITION FORM

## Conditions of use

Please fill the fields below.

**Appliance on witch the valve will be used:**

**Ambient temperature: normally expected: °C, maximum °C**
**Water temperature: normally expected: °C, maximum °C**
**Duty cycle:**
**Number of daily operations:**
**Expected life time:**
**Fluid: has to be water, clean and without chemical agent.**
**Flow rate:**

Flow rate is an instantaneous value, measured after 60 seconds of stabilization.
The flow is regulated on the pressure range from 1 to 10 bar.
VAI valve is available with the following flow regulators.

**Inlet flow regulator**

Thick regulator required

Only available with inlet thread 3/4

| FLOW Litre/min | Tolerance | |
|---|---|---|
| 2,5 | 15% | |
| 3 | 15% | |
| 3.5 | 15% | |
| 3.75 | 15% | |
| 4 | 15% | |
| 5 | 15% | |
| 5.5 | 15% | |
| 6 | 15% | |
| 6.5 | 15% | |
| 8 | 15% | |
| 9 | 15% | |
| 10 | 15% | |
| 11 | 15% | |
| 12 | 15% | |
| 14.5 | 15% | |
| 15 | 15% | |
| 17 | 25% | |

If no flow regulator is used, the appliance must warranty that the flow rate will never be higher than 20 litre/minute.

The information, data and parameters given in this document are subject to change without notice

invensys
Controls

# VAI VALVE DEFINITION FORM

## Agencies Approval

Please indicate us the agencies approval required.

ENEC/VDE according EN60730-2-8 ☐

(Possible for 220-240V 110-120V 12VDC and 24VDC version)

UL according UL429 ☐

(Possible for 220-240V 110-120V version)

NSF according NSF Standard 169 ☐

(VAI W model)

WRAS ☐

KTW W270 ☐

(Component of water valve in contact with water complies with KTW and W270, the TZW nor DvGW cannot certify water valve component on its own right; only final equipment can be certified to TZW and DvGW requirements. Invensys will, on demand, communicate to these agencies the list of material used)

ACS ☐

| | |
|---|---|
| **CUSTOMER NAME** | |
| **ESTIMATED ANNUAL QUANTITIES** | |
| **PRODUCTION START DATE** | |
| **ADDRESS** | |
| **NUMBER of SAMPLES REQUIRED** | |
| **REMARKS and REQUIREMENTS** | |

The information, data and parameters given in this document are subject to change without notice