Appliance Controls

M Series Energy Regulator

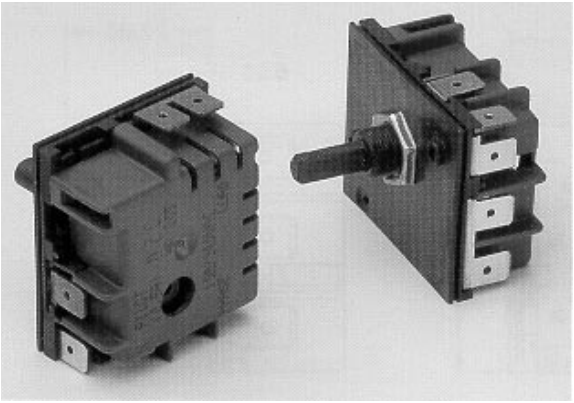

The new M Series Energy Regulator is designed to have the lowest terminal height, in the smallest physical package but still provide the best low end and overall performance.

This has been achieved by using the small “foot print” size of the “T Series” and the skill of the Invensys engineers to develop this patented (pending) design with a terminal height of 13.6mm from the mounting surface to the top of the quick connect terminals.

Built with recyclable materials and fitted with up to three extra switching blades for dual wattage and isolated switching options, this is indeed the ULTIMATE Energy Regulator.

Design Features

- Terminal height of 13.6mm from the mounting surface to top of quick connect terminals. Footprint size 45mm x 38 mm.
- Controllable range from 2.5% to 85% of output power. Full On detent for 100%.
- Energy consumption reduced by 33% through design enhancement. Lower operating temperature in a small space.
- Extra switching blades for special applications like dual wattage, isolated pilot and all pole disconnect, in one model.
- Recyclable material used throughout. Complete disassembly possible using basic tools.
- Push to turn available as option.

Advantages

- Small size allows innovative designs with cost savings on materials.
- Special elements can be used to advantage. Melt chocolate with confidence.
- Reduce the switching compartment to the smallest size. Lowers your costs and allows flexibility for design engineers.
- Special switching configurations possible in the same size, at reduced cost. Low EMI level, complies with all standards.
- Universal applications now possible for countries requiring special recyclable materials.
- ISO9001 approved manufacturer.

Specifications

- 240 Volt 50/60 Hz 15 Amps
- 120 Volt 50/60 Hz 15 Amps
- T125 rated

Manufactured to comply with UL, CE, AUS/NZ requirements
Operating temperature: -20...+ 125°C

Technical Specifications

Typical Dimensions

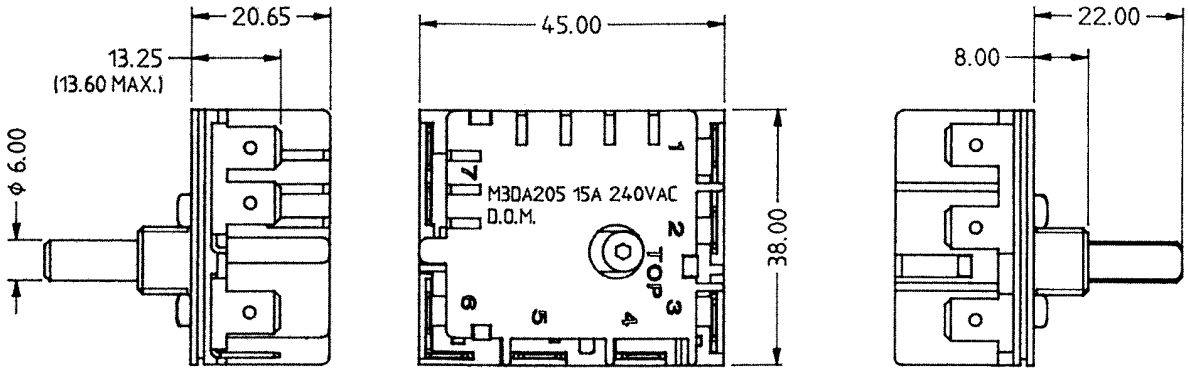

Wiring Diagrams (Typical)

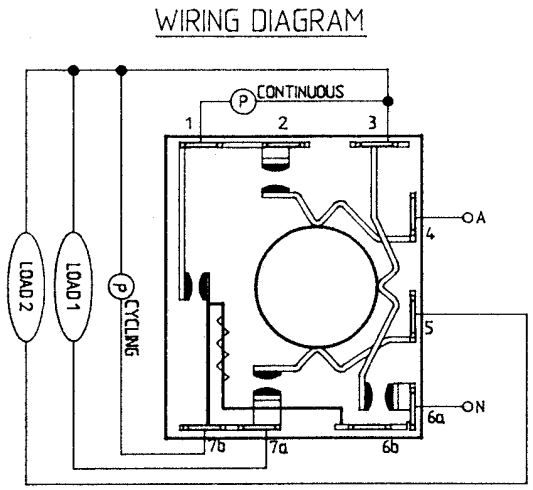

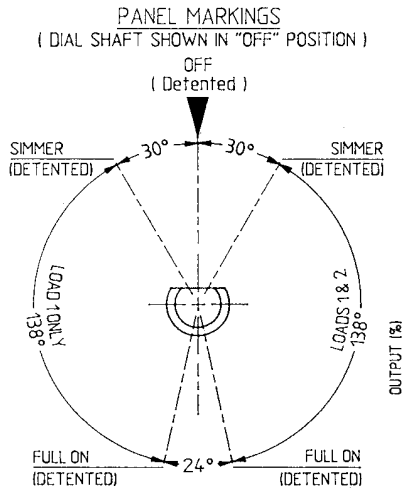

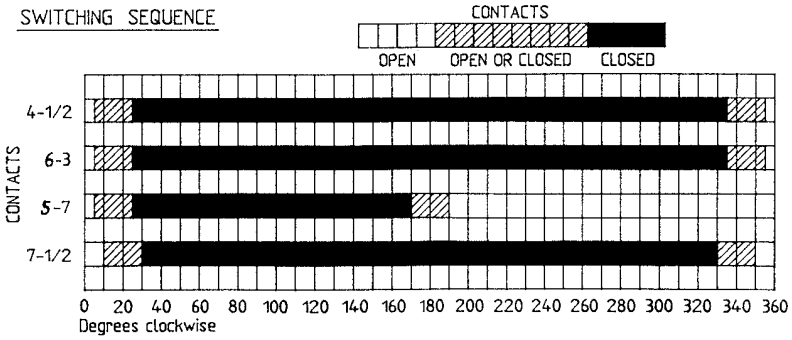

Information subject to change without notice. 7/99