invensys®
Controls

N86F DUAL VALVE

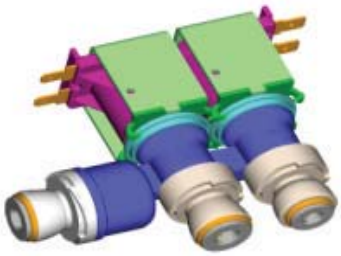

Description

Invensys Controls offers the most complete water valve product line for the residential refrigeration market. The N86F model provides dual ice and water dispensing control in an unique space-saving inline package. A water displacement feature provides improved freeze resistance making the valve suitable for mounting within the door.

Invensys Controls Icemaker Valves are highly resistant to particulate contamination. The self-centering stainless steel armature provides positive closure into the rubber seat as well as the necessary wiping action required for long life. This robust design delivers accurate and reliable performance to all major domestic OEM customers.

Features and Benefits

Space saving inline package.

Accurate and reliable direct acting operation.

Valve design accommodates ice and dispenser side flow controls.

Freeze resistant design utilizes patented water displacement plug.

RoHS Compliant.

Specifications

Mechanism Type	Direct acting
Coil Terminals	Brass male spades per NEMA DC-2 Coil 'A' - 1/4 inch (6.35mm) Coil 'B' - 5/16 inch (7.93mm)
Inlet Port	Quick connect, 5/16 inch (7.93mm)
Outlet Ports	Quick connect, Dispenser - 1/4 inch (6.35mm) Icemaker - 5/16 inch (7.93mm)
Inlet / Outlet Port Configuration:	Straight
Coil Rating:	110/120 V, 50/60 Hz. (others available)
Coil Power:	20W
Flow Rate:	0.06 to 0.7 GPM (+/- 15%)
Body Material:	Polypropylene

Environmental Conditions

Inlet Pressure:	20 to 120 psi
Maximum Pressure:	175 psi
Water Temp.:	100°F (40°C)
Ambient Temp.:	140°F (60°C)

In Application

Water Usage:	Icemaker: 140cc +/- 15cc in 7.5 seconds Dispenser: 180cc – 600cc in 7.5 seconds
Valve Activation Life Requirements:	100,000 cycles
Opening Voltage:	85% @ 150 psi
Duty Cycle:	Intermittent

Agency Approvals:

UL File #MH-6499, CSA File #LR-62581, DEMKO, WrC (upon request)

invensys®
Controls

N86F DUAL VALVE

Dimensional Drawings

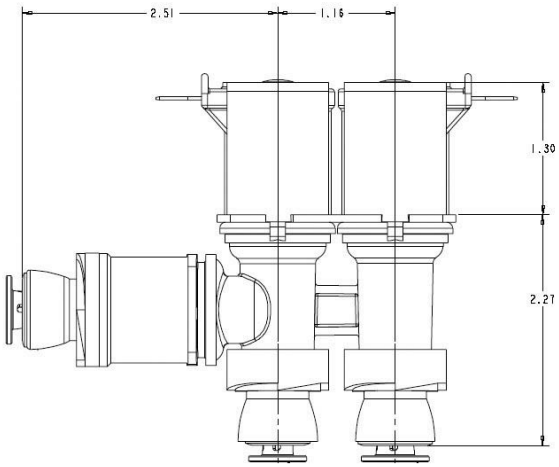

Customer Information

Customer

Location

Estimated Annual Volume

Target Production Start Date

Salesperson / Contact Info.

Special Requirements

Check List

Coil Voltage (Check one)

- c 110 - 120 VAC
- c 220 - 240 VAC
- c Other

Coil Terminals (Check one)

- c Male Spade (Ice Side 0.187”, Water .250”)
- c RAST 2.5

Inlet Type (Check one)

- c 1/4” QC
- c 1/4” Threaded Plastic
- c 5/16” QC
- c 5/16” Threaded Plastic

Outlet Type (Check one)

- c Ice 1/4” QC, Dispenser 5/16” QC
- c Ice 1/4” Threaded Plastic
- c Dispenser 5/16” Threaded Plastic

Flow Rate (Check one)

Ice Side:

- c 0.275 GPM

Dispenser:

- c Unregulated
- c 0.5 GPM

Mounting (Check one)

- c Standard
- c Customer Specified (Attach drawing)

Agency Requirements

invensys.
Controls
North American Appliance Group
191 E. North Avenue
Carol Stream Illinois 60188 USA
Telephone 1.630.260.3402
www.invensyscontrols.com
©2007 Invensys Controls

Invensys® is a trademarks of Invensys plc., its subsidiaries and/or affiliated companies.

9/07 – 150-2076