S86 Single Valve

Invensys Controls

DESCRIPTION

Invensys offers the most complete water valve product line for the residential refrigeration market. The S86 model is a single outlet valve used for ice only or system isolation purposes whereas the N86 model provides dual ice and water dispensing control. Both models utilize interchangeable components to maximize flexibility and reduce qualification testing.

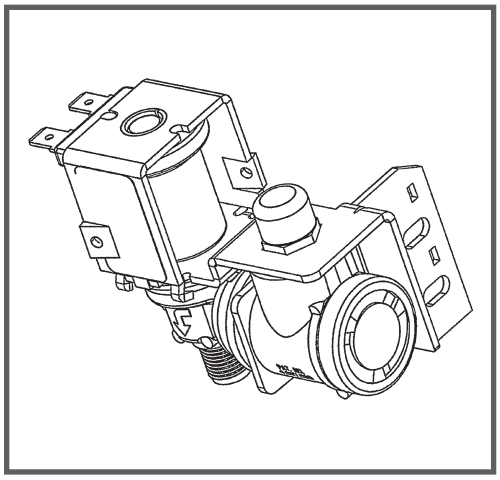

An Invensys Icemaker valve is highly resistance to particulate contamination. The self-centering stainless steel armature provides positive closure into the rubber seat as well as the necessary wiping action required for long life. This unique design delivers accurate and reliable performance to all major domestic OEM customers.

FEATURES / BENEFITS

- Industry leading refrigeration water valve
- Accurate direct acting solenoid
- Highly reliable operator assembly providing the ultimate contamination resistance
- Encapsulated inlet screen eliminates loose end wires from entering the valve mechanism
- Modular design utilizes spin welded components for maximum flexibility
- RoHS Compliant

SPECIFICATIONS

OPERATION:

Pressure Range:	20 to 120 psi
Flow Regulation:	0.06 to 0.5 GPM
Flow Tolerance:	+/- 10% nominal

COIL:

Nominal Voltage:	110-120, 220-240 VAC (Others available upon request.)
Power Consumption:	20W (intermittent) (Consult Carol Stream engineering for other application specific options.)
Frequency:	50-60 Hz
Terminals:	Male Spade (0.250 x 0.031) Male Spade (0.187 x 0.031) RAST 2.5
Construction:	UL Class A, 105° Ambient Nylon

ENVIRONMENTAL:

Liquid Type:	Water
Water Temperature:	100° F (max)
Ambient Temperature:	160° F (max)

Connection options:

1/4" metal
1/4" or 5/16" plastic threaded,
1/4" or 5/16" QC

Body Material:	Polypro

AGENCY APPROVALS:

UL, CSA, DEMKO, NSF,
WrAS (upon request)

S86 Single Valve

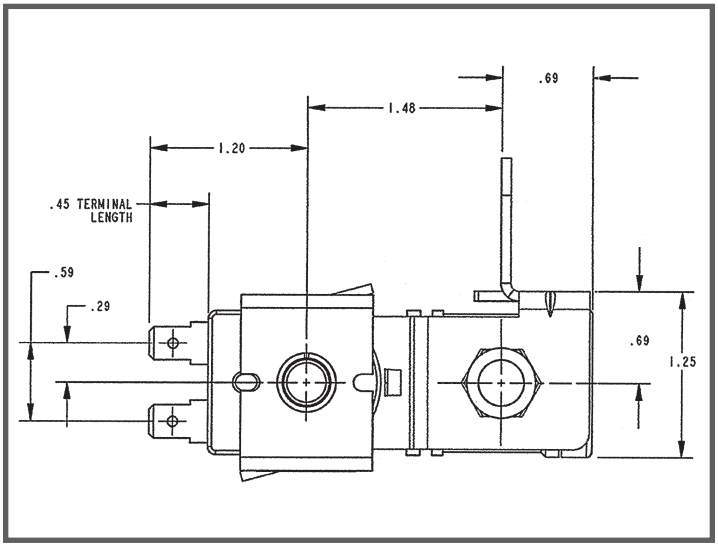

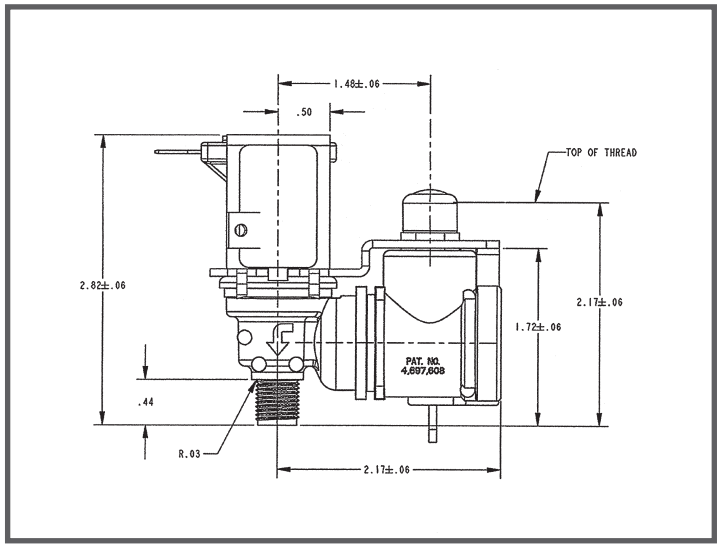

COIL VOLTAGE (Check one)

- 110 - 120 VAC ☐
- 220 - 240 VAC ☐
- Other _____

COIL TERMINALS (Check one)

- Male Spade (0.250 x 0.031) ☐
- Male Spade (0.187 x 0.031) ☐
- RAST 2.5 ☐

INLET TYPE (Check one)

- 1/4" Metal ☐
- 1/4" QC ☐
- 1/4" Threaded Plastic ☐
- 5/16" QC ☐
- 5/16" Threaded Plastic ☐

OUTLET TYPE (Check one)

- 1/4" QC ☐
- 1/4" Threaded Plastic ☐
- 5/16" QC ☐
- 5/16" Threaded Plastic ☐

FLOW RATE (Check one)

- Unregulated ☐
- 0.5 GPM ☐

MOUNTING (Check one)

- Standard ☐
- Customer Specified ☐ (Attach drawing)

AGENCY REQUIREMENTS

_____

_____

Customer / Location: _____

Estimated Annual Volume: _____

Target Production Start Date: _____

Salesperson / Contact Info.: _____

Special Requirements: _____

_____

_____

invensys Controls

Controls Americas
191 E. North Avenue
Carol Stream, Illinois 60188 USA
Telephone: 630.260.3402
©2006 Invensys Controls Americas

150-1989